AC Computer Assignment 1

Michael Marano

1. Spring-Mass-Damper System

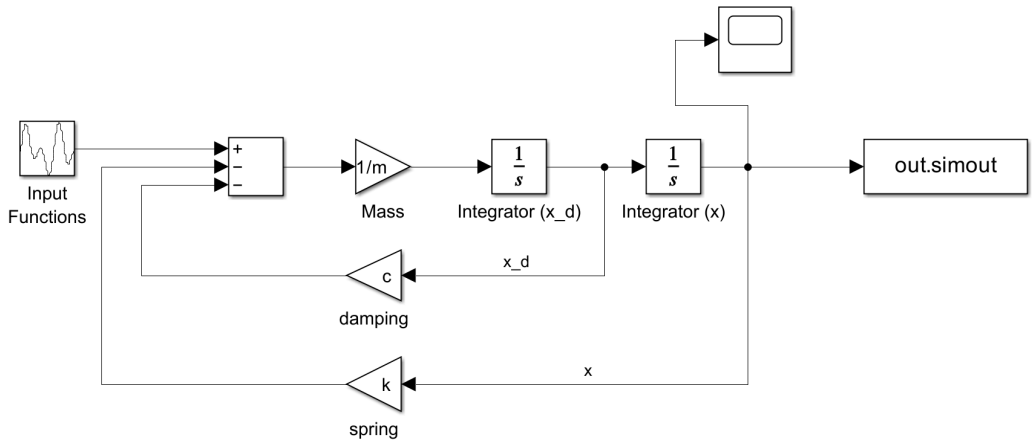

Figure 1: Simulink Model for Spring-Mass-Damper System

This system was simulated first under four cases with a unit step input, and then four cases with a harmonic input. Each simulation had a time window of t = 0 to 100 seconds, with a maximum time interval of 0.1 seconds.

Unit Step Response:

For the unit step input, the cases were as follows:

- Case 1: F(t) = step, m = 5, c = 100, k = 125
- Case 2: F(t) = step, m = 5, c = 50, k = 125
- Case 3: F(t) = step, m = 5, c = 10, k = 125
- Case 4: F(t) = step, m = 5, c = 1, k = 125

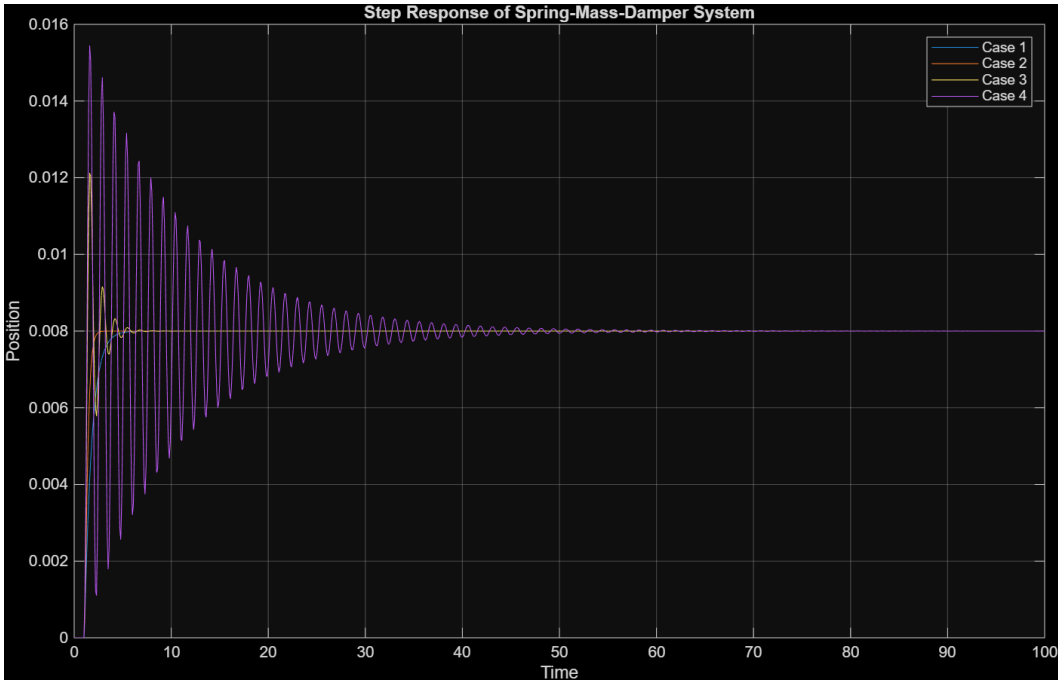

Figure 2: Unit Step Responses for Spring-Mass-Damper System (Overlayed)

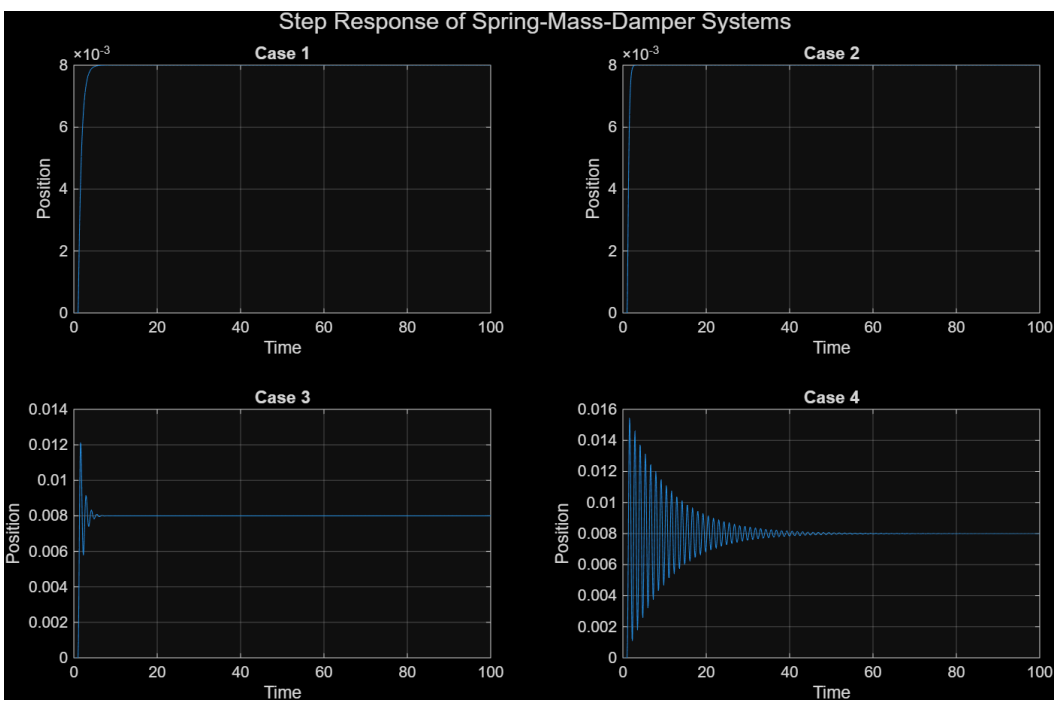

Figure 3: Unit Step Responses for Spring-Mass-Damper System (Separate)

For these cases, the input, mass, and spring stiffness remained constant. The only changing variable was c, the damping constant. It starts at a maximum value of c = 100 in Case 1, then decreases to 50 in Case 2, to 10 in Case 3, and finally to 1 in Case 1. Both Case 1 and 2 approach the equilibrium position of 0.008 with no visible overshoot and relatively quickly, indicating that they are close to being critically damped. Case 2 is slightly more efficient in this, indicating that Case 1 is likely overdamped. Case 3 overshoots the equilibrium position to x = 0.012 and oscillates for a short period of time, reaching equilibrium in roughly 5 seconds. Case 4 is severely underdamped and takes over 40 seconds to get close to equilibrium.

Harmonic Response:

For the harmonic input, the cases were as follows:

- Case 1: F(t) = sin(t), m = 5, c = 0, k = 125
- Case 2: F(t) = sin(4.5t), m = 5, c = 0, k = 125
- Case 3: F(t) = sin(5t), m = 5, c = 0, k = 125
- Case 4: F(t) = sin(5t), m = 5, c = 5, k = 125

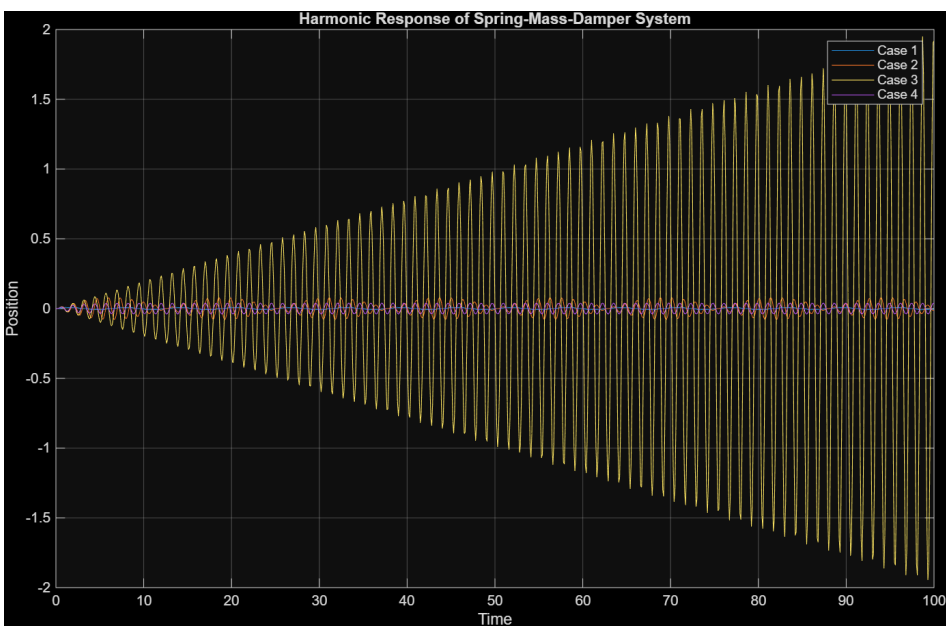

Figure 4: Harmonic Responses for Spring-Mass-Damper System (Overlayed)

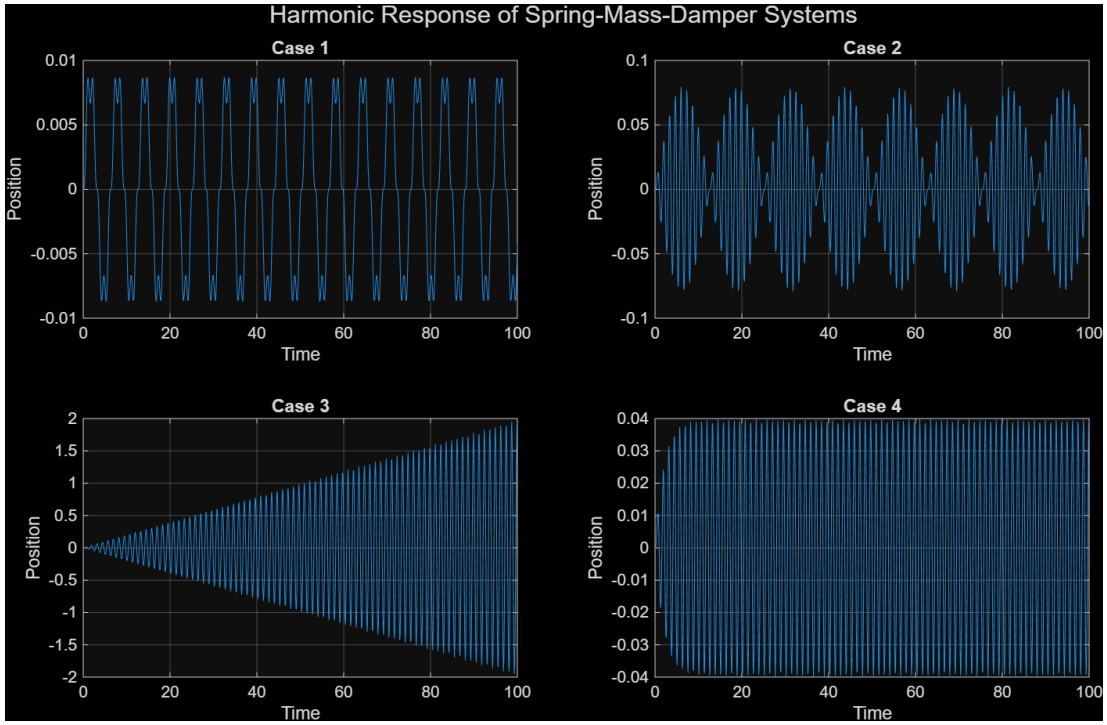

Figure 5: Harmonic Responses for Spring-Mass-Damper System (Separate)

For the first three of these cases, the only changing variable is the frequency, ω, of the harmonic input. Each m, c, and k are set to 5, 0, and 125 respectively. For Case 1, ω is 1. For Case 2, ω is 4.5. For Case 3, the ω is 5. Case 4 is similar to Case 3 but introduces a damping constant of c = 5, keeping ω at 5, m at 5, and k at 125. Each ω is in radians per second, so the period T becomes $2\pi/\omega$. For Case 1, this is about 6.3 seconds. Case 2 is about 1.4 seconds, and Case 3 and 4 are roughly 1.26 seconds. From the time axes in the figures above, it is clear that the responses of the system are consistent with these periods. As ω increases, it nears the natural frequency, ω_n, which is equivalent to $\sqrt{k/m} = \sqrt{125/5} = 5$. As ω is relatively far from ω_n in Case 1, the system only experiences small displacements of ~+/- 0.0075. Case 2 experiences larger displacements (about 10 times greater than Case 1) at a higher frequency. For Cases 3 and 4, ω is actually equivalent to ω_n, which is what causes the position to increase

indefinitely in Case 3. Case 4 introduces a damping constant which manages to tame this behavior and keep the position within bounds of +/- 0.04.

2. Spring-Mass-Damper-Spring-Mass System

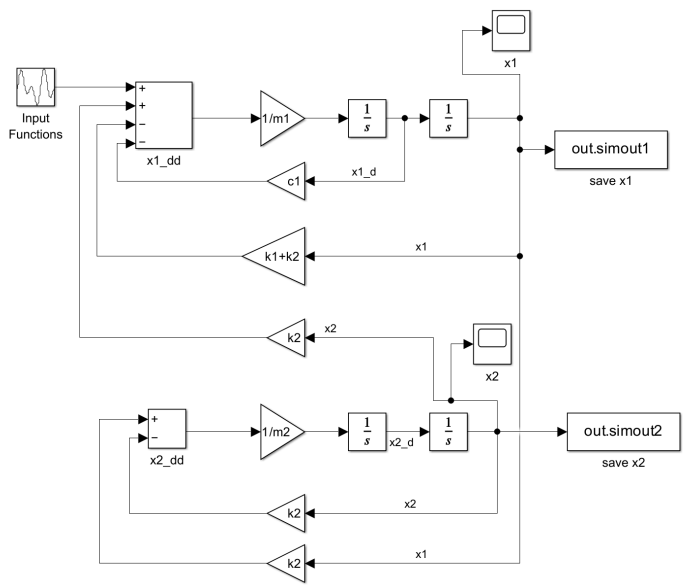

Figure 6: Simulink Model for Spring-Mass-Damper-Spring-Mass System

This system was simulated under four cases. The first case was with a unit step input, and the remaining three were with harmonic inputs. Each simulation had a time window of t = 0 to 100 seconds, with a maximum time interval of 0.1 seconds. The cases were as follows:

- Case 1: F(t) = step, m1 = 2, m2 = 5, c1 = 2, k1 = 4, k2 = 20
- Case 2: F(t) = sin($\sqrt{2}$ t), m1 = 2, m2 = 5, c1 = 2, k1 = 4, k2 = 20
- Case 3: F(t) = sin(2t), m1 = 2, m2 = 5, c1 = 2, k1 = 4, k2 = 20
- Case 4: F(t) = sin(5t), m1 = 2, m2 = 5, c1 = 2, k1 = 4, k2 = 20

Response:

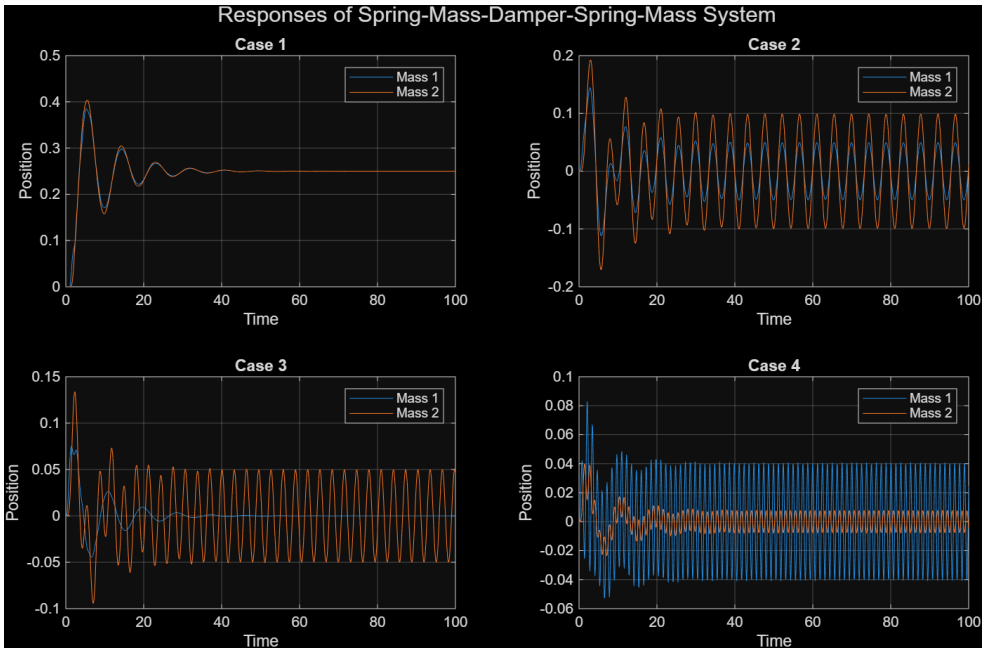

Figure 7: System Responses for Spring-Mass-Damper-Spring-Mass System

All four cases for this system have the same masses, damping constant, and spring constants. The only changing variable is the input force, with a step input for Case 1 and a harmonic input with increasing frequencies for the remaining three. The first case for this system indicates that it is underdamped, hence the overshoot. Mass 2 actually experiences a larger maximum displacement, but both come to equilibrium at about the same value of 2.5 (for each of x1 and x2). Each of the remaining cases do appear to still exhibit underdamping as there is certainly an initial overshoot, despite the oscillating behavior. Case 2 and 3 both show Mass 2 experiencing greater displacements than Mass 1, but interestingly the reverse is true for Case 4. In Case 3, Mass 2 oscillates between roughly +/- 0.05, but interestingly Mass 1 stays almost completely still after reaching equilibrium at its initial position. In Case 4, Mass 1 oscillates between roughly +/- 0.04 and Mass 2 oscillates in a smaller range between about +/- 0.01. Across the four cases, these displacements become increasingly smaller, despite the more

aggressive inputs. Case 3 appears to be close to resonance for Mass 2 and Case 4 to resonance for Mass 1, but damping effects keep the system oscillating between bounds.